Presence detector - Professional Line

Hallway

COM1 - Concealed wiring
EAN 4007841 057985
Article number 057985
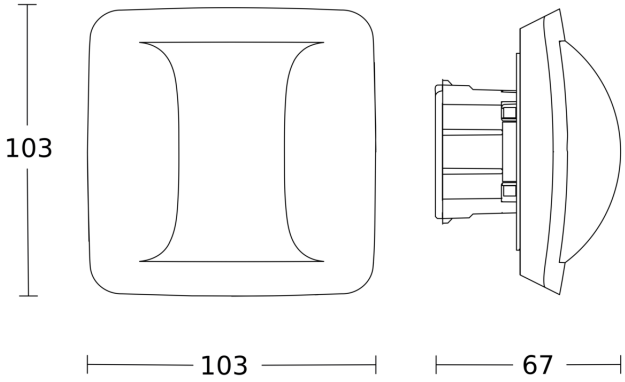
Dimension Drawing